Japanese Journal of Physiology, **31**, 585–597, 1981

Anaerobic Threshold Determination by Blood Lactate and Myoelectric Signals

Akira NAGATA, Masuo MURO,* Toshio MORITANI,** and Takayoshi YOSHIDA***

Bio-dynamics Laboratory, Tokyo Metropolitan University, Tokyo, 152 Japan
**Bio-dynamics Laboratory, Tokyo College of Pharmacy, Tokyo, 192–03 Japan*
***Bio-dynamics Laboratory, University of Texas at Arlington, U.S.A.*
****Bio-dynamics Laboratory, Tsurumi University, Kanagawa, 230 Japan*

Abstract This study examined the potential use of myoelectric signal analysis for determination of anaerobic threshold (AT). Ten college students performed incremental exercise on a bicycle ergometer during which blood samples from either the brachial or radial artery were drawn and corresponding intergrated electromyogram (IEMG) and power spectra also were recorded. Blood AT was determined by observing the changes in arterial blood lactate, P_{O_2} P_{CO_2}, HCO_3^-, and pH. EMG AT was determined by the non-linear increase in IEMG and abrupt increase in frequency band width at 70% of the peak frequency ($FRQ_{70\%}$) which could represent the most active frequency band. The results indicated that a significant increase in $FRQ_{70\%}$ occurred immediately after the occurrence of blood AT ($p<0.05$). However, no significant increase could be found in peak frequency. Regression analyses revealed that EMG AT $\dot{V}_{O_2}$ correlated significantly with blood AT $\dot{V}_{O_2}$ ($r=0.921$, $p<0.001$) and with gas exchange AT $\dot{V}_{O_2}$ ($r=0.921$, $p<0.001$). It was concluded that analysis of myoelectric signals, which reflect motor unit recruitment and discharge frequency, could provide a non-invasive estimate of AT.

At low and moderate work rates, all of the CO_2 produced may be derived from the aerobic metabolism of substrates such as fat and carbohydrate. However, lactic acid may be formed at sufficiently heavy intensities of work due to anaerobic metabolism. This in turn adds the CO_2 output by the buffering reaction of bicarbonate (broken down in buffering hydrogen ion) and lactic acid. Thus, during an incremental exercise test there may be a "threshold" beyond which additional CO_2 may be produced at the expense of rapid decreases in bicarbonate along with the CO_2 produced from the oxidation of energy substrate. This in turn increases the rate of CO_2 output ($\dot{V}_{CO_2}$) disproportionally with respect to the rate of O_2 con-

Received for publication December 11, 1980
永田　晟，室　増男，森谷敏夫，吉田敬義

sumption ($\dot{V}_{CO_2}$).

ISSEKUTZ *et al.* (1962) found a disproportionate increase in $\dot{V}_{CO_2}$ subsequent to increased lactic acid production and suggested that an increase in the gas exchange ratio $R(\dot{V}_{CO_2}/\dot{V}_{O_2})$ could be a useful indirect measure of lactic acidosis. WASSERMAN *et al.* (1967) reported that the metabolic acidosis induced by lactic acid formation increased the expired respiratory minute volume ($\dot{V}_E$) curvilinearly with $\dot{V}_{CO_2}$ and $\dot{V}_{O_2}$. The non-linear increase in $\dot{V}_E$ (in excess of that required to maintain arterial P_{CO_2}) resulted in a progressive decrease in arterial P_{CO_2} and consequently induced respiratory compensation for the metabolic acidosis. Thus, WASSERMAN *et al.* (1973) have defined the *anaerobic threshold* as "the level of work or O_2 consumption just below that at which metabolic acidosis and the associated changes in gas exchange occur."

Studies of anaerobic threshold (AT) in selected cardiac patients (WASSERMAN *et al.*, 1973; WASSERMAN and WHIPP, 1975) have shed some light on the physiological mechanisms of lactic acidosis (acidemia) among the patients who demonstrated anaerobiosis and lactic acidemia at relatively low work rate (0–60 watts). They suggested that partial occlusion of conducting arteries supplying active muscles due to atherosclerotic lesions might have caused an inadequate blood supply to the working muscles. WASSERMAN and WHIPP (1975) have shown that patients with anemia may demonstrate anaerobic glycolysis and metabolic acidosis at a relatively low work intensity because of the inadequate blood O_2-carrying capacity to the working muscles.

DAVIS *et al.* (1979), on the other hand, have shown that after 9 weeks of endurance training in middle-aged men, the amount of work performed without an accumulation of lactic acid is significantly increased as indicated by the training-induced shift in the AT. Consequently, slower rates of muscle glycogen depletion and, therefore, lesser lactate formation seen during submaximal work in the trained state as compared to the untrained state (SALTIN and KARLSSON, 1971; COSTILL *et al.*, 1973; SALTIN, 1977) may be explained on the basis of the delayed onset of anaerobic glycolysis.

Despite these potential applications in both clinical and athletic training fields, the assessment of AT at the present time can only be made in the laboratories where invasive techniques (direct blood sampling) or non-invasive respiratory gas analyses (breath-by-breath method with on-line computer system) can be carried out. Interestingly, MORITANI (1980) has recently shown the possibility that AT can be estimated by the use of conventional electromyography technique in which an integrated electromyogram (IEMG) fatigue curve was analyzed.

It was the purpose of this study to validate the electromyographic AT determination technique and provide further information regarding the disturbances in gas exchange associated with the exercise metabolic acidosis, particularly a more complete description of the cardio-respiratory and neuro-physiological adaptations to incremental excercise. In order to validate this electromyographic technique

for AT determination, the changes in myoelectric signal characteristics (IEMG, power spectral density, and peak power frequency) were studied with respect to the changes in arterial blood (lactate, HCO_3^-, P_{O_2}, P_{CO_2}, and pH) as well as the changes in the respiratory gas exchange parameters. In so doing, it was hoped that our data would also clarify the effect of lactate accumulation upon motor unit activities and the functional definition of AT from the viewpoint of muscular fatigue.

METHODS

Subjects. Ten healthy male college students (21±1.6 yrs; 170.5±6.0 cm; 65.2±6.0 kg) volunteered for this study. The subjects were informed of the experimental procedures and possible risks and thereafter each subject signed the informed consent. Prior to the experiment, each subject underwent a general medical examination, including 12 lead resting ECG, blood pressure, and spirometric test, *etc.* by a physician who was present throughout the experiment.

Blood sampling and analysis. Blood samples were obtained during rest and every minute after the onset of exercise until the occurence of volitional exhaustion from a Teflon catheter which had been inserted into either the radial or the brachial artery through a MEDICUT cannula after local anaesthesia with 0.5% xylocaine. Blood pH (Horiba glass electrode), P_{O_2} (Clarke electrode), P_{CO_2} (Clarke-Serveringhause electrode) were all determined at 37°C (Coring Evans model 160). HCO_3^- concentration was calculated according to the Henderson-Hasselbach equation. Blood lactate was analyzed enzymatically (Boeringer Manheim, W. Germany) after deproteinization with 0.6 N perchloride acid ($HClO_4$). All blood analyses were performed by laboratory technicians at the Tsurumi University.

Analysis of myoelectric signals. Myoelectric signals were recorded from the vastus lateralis muscle with a bipolar lead system through a telemeter system (EMG telemeter Model A-2, Sanei Sokki) with a time constant of 0.03 sec. A reference electrode was placed on the skin over the volar aspect of the anterior crest of ilium. All electrode placements were preceded by abrasion of the skin so that source impedance was reduced to less than 4 kΩ. Figure 1 shows a schematic diagram of the myoelectric signal analysis system used in this study.

With this system, the EMG power spectrum was obtained through the generation of auto-correlation function of the myoelectric signals and the fast Fourier transformation (FFT). The autocorrelation of the signals at points $t_1, t_2, \ldots, N$ with sampling interval (τ) [$C_{xx}(\tau)$] is given by the following equation,

$$C_{xx}(\tau)=\overline{X_t X_{t+\tau}} = \lim_{t\to\infty} \frac{1}{t}\int_0^t X_t X_{t+\tau}\, dt \qquad (1)$$

After obtaining $C_{xx}(\tau)$, which can be considered a probability function of the periodicity of the signal in the time domain, the power spectral density [$S(j\omega)$] can be

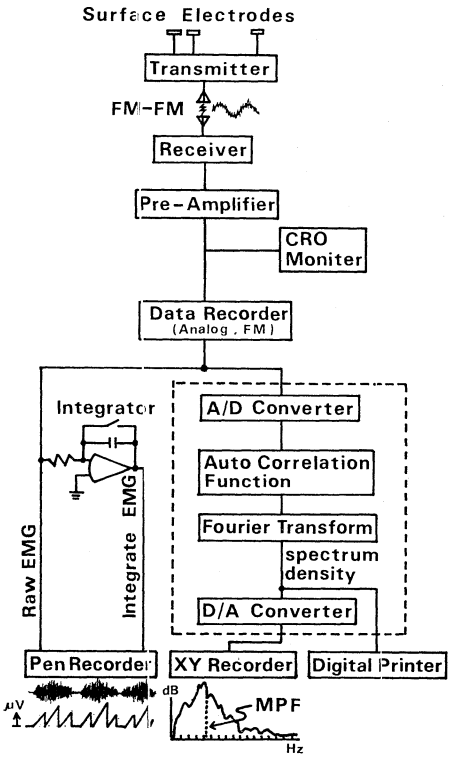

Fig. 1. Schematic block diagram of the myoelectric signal analysis system used in this study so as to obtain IEMG, PER, $FRQ_{70\%}$ and power spectral density.

obtained by the Fourier transformation of $C_{xx}(\tau)$

$$S(j\omega)=\int_0^\infty C_{xx}(\tau)e^{-j\omega\tau}\,d\tau \tag{2}$$

During this process, the analog signal from the data recorder (TEAC model 201) was converted to a digital signal and then introduced into a mini computer (TEAC Real Time Digital Correlation C-12 and Kanomax Fast Fourier Transform Analyzer SAI-470). The autocorrelation function was calculated for a period of 50 sec at a sampling time (Δt) of 1 msec. FFT was performed with the Hamming window to obtain a power spectrum with a frequency response between 5 and 500 Hz. For analytical purposes, the frequency at the highest point of the power spectrum was defined as the peak frequency (PFR) and the band width of the spectrum at 70% of the PFR was defined as the 70% zone frequency ($FRQ_{70\%}$), respectively. In addition, the integrated EMG (IEMG) was obtained by passing the myoelectric signals through the Miller integrating circuit from the data recorder.

Determination of AT. The occurrence of AT was determined for each subject

during an incremental exercise test on a Monark bicycle ergometer at 50 rpm. The incremental test consisted of 4 min unloaded pedalling and thereafter 150 kpm/min (24.5 watts) increment at every succeeding minute until the occurrence of volitional exhaustion. The starting point of blood AT was determined by observing the changes in arterial blood lactate, P_{O_2}, P_{CO_2}, HCO_3^-, and pH. The point of EMG AT was determined by the non-linear increase in IEMG and abrupt changes in PFR and $FRQ_{70\%}$. Gas exchange AT (Gas AT) was based on the non-linear increase in $\dot{V}E$ and $\dot{V}_{CO_2}$, abrupt increase in FE_{O_2}, and R, and systematic increase in $\dot{V}E/\dot{V}_{O_2}$ with invariant $\dot{V}E/\dot{V}_{CO_2}$. For this purpose, a conventional open-circuit system (Douglas bag method) was used. The expired gas samples were analyzed by a gas monitor (Sanei Sokki).

Statistical procedures. Regression analyses and correlation analyses were performed on the appropriate data. Paired t-tests were also used to evaluate differences in the appropriate data at the 0.05 level of confidence.

RESULTS

It was found that blood AT could easily be determined by observing the well-defined breakpoint (abrupt increase) in blood lactate. Figure 2 shows the mean arterial blood lactate concentration ($n=10$) during the incremental exercise test. The time point of blood AT was indicated by a dotted vertical line.

Figure 3 indicates a typical change in the power spectral density before and after the onset of blood AT. With very few exceptions, it was found that the low (below 25–30 Hz) and middle (around 30–60 Hz) frequency zone tended to shift toward lower frequencies while that of the higher frequency zone (above 60–70 Hz) tended to increase its contribution to the power spectral density after the onset of AT. When we focused our observation on the changes in PFR before and after the onset of blood AT, no statistically significant difference could be found (mean

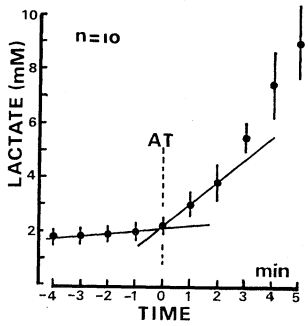

Fig. 2. Changes in the mean arterial blood lactate concentration during incremental exercise test ($n=10$). In this figure, the starting point of blood AT for each subject was used as a reference point in time.

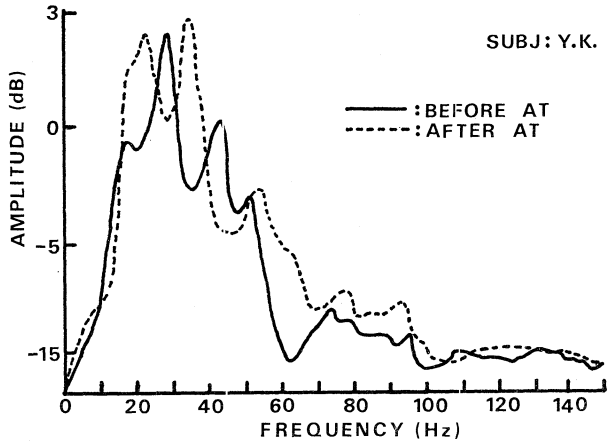

Fig. 3. A typical set of data showing the change in power spectral density before and after the occurrence of blood AT.

diff. 4.5 Hz, $t=0.94$, $p>0.05$).

However, when $FRQ_{70\%}$ (which may be interpreted as the most active frequency zone width in the power spectrum) was compared before and after the time point of AT, the difference was found to be significant (mean diff. 10.3 Hz, $t=2.82$, $p<0.05$). It seems likely that the increase in $FRQ_{70\%}$ could be the result of increased contributions of the middle and high frequency zone and the shift of the lower and middle frequency zone toward lower frequencies, thus widening the $FRQ_{70\%}$.

A typical set of data regarding the time-course of arterial blood lactate concentration, IEMG, $FRQ_{70\%}$ were plotted in Fig. 4. The time point EMG AT as determined by the non-linear increase in IEMG, abrupt increase in $FRQ_{70\%}$ and PFR (which was found to be least sensitive) seemed to appear with a slight time delay. However, in some cases (4 of 10 subjects) the abrupt increase in $FRQ_{70\%}$ did indeed correspond with the time point of blood AT, as in Fig. 4.

The paired t-test between $\dot{V}_{O_2}$ values at the time point of blood AT and those of EMG AT revealed that the difference was statistically significant (mean diff. 0.20 liter/min, $t=3.98$, $p<0.05$). Regression analysis indicated that although the EMG AT regression line was slightly elevated above the identity line, a significant correlation did exist between blood AT $\dot{V}_{O_2}$ and EMG AT $\dot{V}_{O_2}$ values ($r=0.921$, $p<0.001$) (see Fig. 5 and Table 1).

Results from the regression analysis for Gas AT with respect to blood AT are shown in Fig. 6. It was found that a significant correlation existed between Gas AT $\dot{V}_{O_2}$ values ($r=0.916$, $p<0.001$) with the regression line being slightly elevated as in the case of the EMG AT $\dot{V}_{O_2}$ values. The paired t-test revealed that the difference between Gas AT $\dot{V}_{O_2}$ values and those of blood AT $\dot{V}_{O_2}$ was found to be statistically significant (mean diff. 0.16 liter/min, $t=3.16$, $p<0.05$), suggesting the

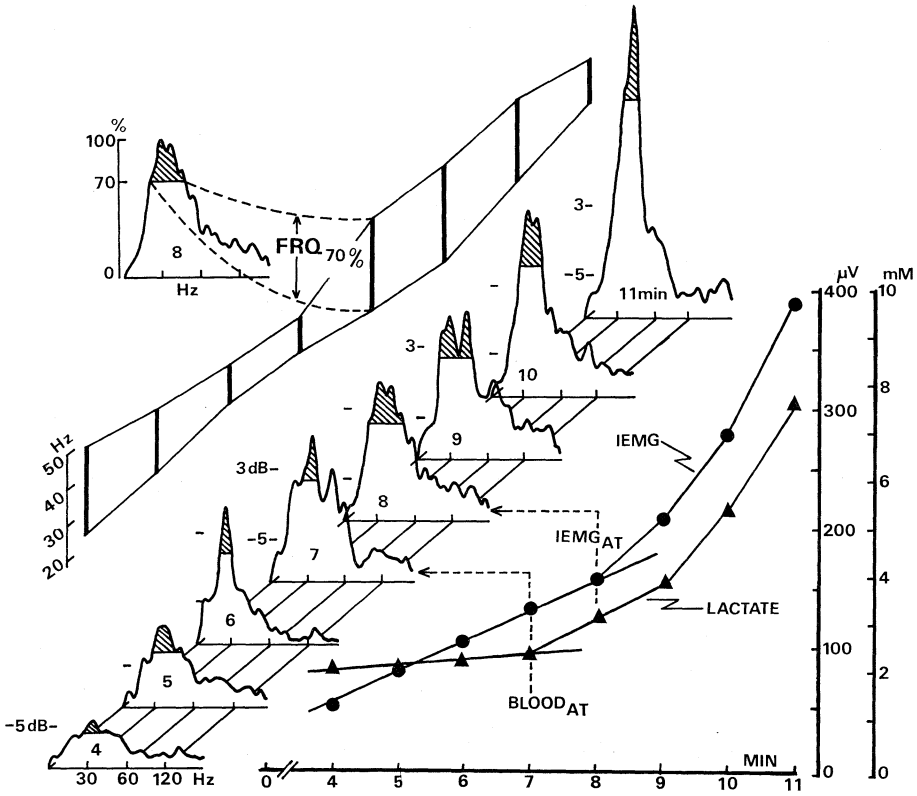

Fig. 4. The time-course of arterial blood lactate, IEMG, and $FRQ_{70\%}$ change during the incremental exercise test.

Table 1. Results of paired t-tests on $\dot{V}_{O_2}$ values at the time of AT as determined by EMG, blood, and gas exchange methods.

Variable	Mean±S.E. (liters/min)	Diff.	t	p
EMG AT $\dot{V}_{O_2}$	1.91±0.36	0.20	3.98	<0.05
Blood AT $\dot{V}_{O_2}$	1.71±0.30			
Gas AT $\dot{V}_{O_2}$	1.87±0.35	0.16	3.16	<0.05
Blood AT $\dot{V}_{O_2}$	1.71±0.30			
EMG AT $\dot{V}_{O_2}$	1.91±0.36	0.04	0.78	>0.05
Gas AT $\dot{V}_{O_2}$	1.87±0.35			

existence of a slight time delay in the appearence of Gas AT as compared to that of blood AT. Additional analyses indicated that Gas AT $\dot{V}_{O_2}$ and EMG AT $\dot{V}_{O_2}$ values were correlated (r=0.921, p<0.001) and did not differ from each other to

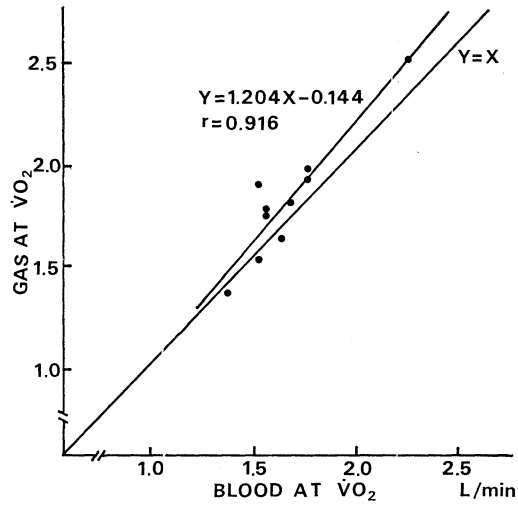

Fig. 5. Relationship between EMG AT and blood AT as expressed by $\dot{V}_{O_2}$ values.

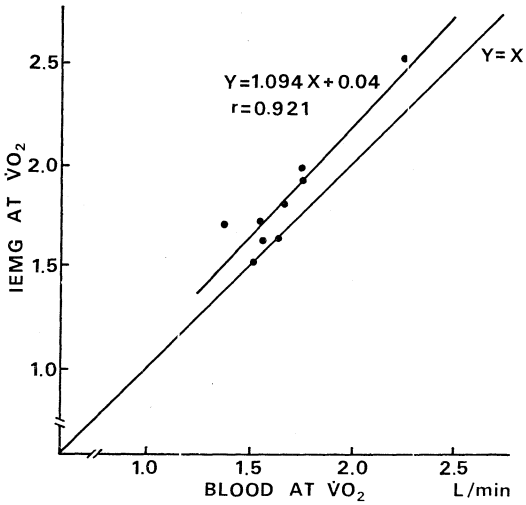

Fig. 6. Relationship between Gas AT and blood AT as expressed by $\dot{V}_{O_2}$ values.

any significant extent (mean diff. 0.04 liter/min, $t=0.78$, $p<0.05$).

DISCUSSION

Lactate production has been shown to occur even at low exercise intensities (DEPOCAS *et al.*, 1969; JORFELDT, 1970) and the concurrent utilization (metabolism) of lactate during exercise has been found to be appreciable (STAINSBY and WELCH,

1966; KEUL *et al.*, 1967; JORFELDT, 1970). For example, during exercise both active muscle (STAINSBY and WELCH, 1966; JORFELDT, 1970) and inactive muscle (HARRIS *et al.*, 1962; KEUL *et al.*, 1967) utilize lactate. Other possible sites of lactate utilization during exercise include the heart (CARLSTEN *et al.*, 1961; OLSON, 1963), kidney cortex (LEVY, 1965; KREBS *et al.*, 1966), and liver (ROWELL *et al.*, 1966). If the concept of anaerobic threshold were to be merely the "threshold" beyond which *lactate production* occurs, then this concept needs revision. However, DAVIS *et al.* (1979) have defined the onset of a metabolic acidosis as the anaerobic threshold which is meant to be a functional definition and does not imply causality. Therefore, one can assume the anaerobic threshold as "threshold" beyond which the dynamic equilibrium of lactate production and utilization unbalances so that the rate of lactate production may exceed the rate of utilization, thus leading to intramuscular acidification with well-known subsequent respiratory compensation for metabolic acidosis.

FITTS and HOLLOSZY (1976) have shown that there was a highly significant correlation ($r=-0.99$) between the increase in lactate and the decrease in contractile force as evaluated in electrically stimulated frog muscle. In good agreement with this finding, there has been some evidence that may explain the mechanisms by which a decrease in intracellular pH could interfere with muscular contractile function. PORTZEHL *et al.* (1969) and FUCHS *et al.* (1970) showed that an increase in H^+ interfered with Ca^{2+} binding to troponin by lowering the apparent binding constant. NAKAMURA and SCHWARTZ (1972) found that the affinity of sarcoplasmic reticulum for Ca^{2+} was also specifically dependent upon pH, thus suggesting the possible participation of $[H^+]$ in E-C coupling. These findings seem to suggest that a decrease in intracellular pH caused by an increase in lactate accumulation may interfere with the E-C coupling with subsequent deficit in the developed force.

Under these physiological conditions, *i. e.*, the onset of metabolic acidosis, if the force output were to be maintained or even increased during an incremental exercise test, a progressive recruitment of additional motor units (MUs) with fast-twitch oxidative glycolytic (FOG) and fast-twitch glycolytic (FG) muscle fibers might take place. Furthermore, a progressive increase in the firing frequency of the already active MUs and/or some newly recruited MUs would also be likely to take place so as to compensate for the deficit in the developed force. This is particularly so if we assume that ATP supply for slow-twitch oxidative (SO) muscle fiber through oxidative phosphorylation becomes inadequate and therefore must be supplemented by tapping energy reserves available through anaerobic glycolysis, leading to metabolic acidosis.

The observed non-linear increase in IEMG and $FRQ_{70\%}$ could be explained by the mechanisms described above. Furthermore, the IEMG recorded with surface electrodes would necessarily represent a summation of MU recruitment and firing frequency so that non-linear IEMG can also be explained by a progressive recruitment of MUs with possible participation of FOG and FG fibers producing larger

action potentials (PERSON and KUNIDA, 1972; TANJI and KATO, 1973b), followed by some degree of synchronization of MU potentials as these fibers may undergo a progressive fatigue (ZHUKOV and ZAKHARYANTS, 1960; MILNER-BROWN *et al.*, 1973a). In this line of reasoning, the shift of the low and middle frequency zone of the power spectrum toward lower frequencies immediately after the onset of blood AT could be attributed to some fatiguing MUs. Studies on EMG power spectral changes during fatigue seem to indicate that the shift in the power spectrum toward lower frequencies may be the result of decreased muscle action potential conduction velocities and the changes in form of action potentials due to lactate accumulation with subsequent drop in pH and some other metabolites (KADEFORS *et al.*, 1968; LINDSTROM *et al.*, 1970, 1977; MORTIMER *et al.*, 1970; KOMI and TESCH, 1979).

Available human studies on the relative contributions of MU recruitment and MU firing frequency have suggested that the largest contributions of MU recruitment may occur at relatively low force levels while the contribution of increased MU firing frequency becomes more important at higher force levels (MILNER-BROWN *et al.*, 1973b; TANJI and KATO, 1973a, b). GYDIKOV and KOSAROV (1974) have shown that the tonic MUs are characterized by increases in firing frequency at lower tensions and constant frequency at higher tensions. On the other hand, the phasic MUs continued to increase their firing frequencies up to the maximum tension level. KOMI and VIITASALO (1976) indicated that at about 60% of contractile force, practically all of the tonic MUs have attained their maximal firing frequency and that the further increase in muscle force is due to increases in recruitment and firing frequency of phasic MUs. Therefore, the significant increase in $FRQ_{70\%}$ may be explained on the basis that immediately after the onset of AT, some of the phasic MUs with FOG and FG fibers started to increase their firing frequency while tonic MUs with SO and possibly FOG fibers begin to fatigue leading to the shift toward lower frequencies, yet maintaining their contributions to the power spectral density, thus widening the $FRQ_{70\%}$. Our data seem to suggest that during incremental exercise, the time-course of the changes in power spectral density should be considered as dynamic in nature since some degree of overlap in so-called "tonic" and "phasic" MUs could exist due to the effect of fatigue and the level of force output upon MU recruitment and firing frequency.

As to the time difference between the onset of blood AT and those of EMG AT and Gas AT, several explanations may be postulated. First of all, recent studies (MORITANI, 1980; YOSHIDA *et al.*, 1980) have shown that the determination of AT by IEMG method can be well validated against the gas exchange method. MORITANI (1980), for example, obtained a highly significant correlation of $r=0.973$ with $n=36$ while plotting every 10 sec IEMG values. In the present study, all parameters (arterial blood samples, gas parameters, IEMG, and power spectra) were taken every minute. Therefore, the lesser resolution of the methods (EMG and Gas AT) reported here might have caused the observed time delay when compared with blood AT which was found to be most sensitive and easily detectable.

A slight inaccuracy in determining the onset of AT by EMG as well as the Gas method could have resulted in using a 1-min delayed AT $\dot{V}_{O_2}$ value in some cases for the comparison. Secondly, if in fact the onset of blood AT is detectable prior to those of Gas AT and EMG AT, a physiological rationale is needed. Earlier work (WASSERMAN *et al.*, 1973; DAVIS *et al.*, 1976) showed that the gas exchange AT method was well validated against blood AT in which venous blood lactate from the anticubital vein periodically was obtained. In the present study, blood AT was determined by arterial blood lactate, P_{O_2}, P_{CO_2}, HCO_3^-, and pH changes collectively, making the determination of AT quite sensitive and accurate. Furthermore, unless venous blood lactate were taken from the femoral vein directly during incremental cycling exercise which has been used in the previous studies as an experimental mode, there would be a time delay in lactate sampling during which lactate utilization may occur in the active muscle (STAINSBY and WELCH, 1966; KARLSSON, 1979) as well as inactive muscle (HARRIS *et al.*, 1962; KEUL *et al.*, 1967) or in the heart (CARLSTEN *et al.*, 1961; OLSON, 1963). The same criticism can be applied in the case of arterial blood sampling. However, if the site of blood sampling were to be at the relatively inactive forearm during cycling exercise, arterial blood lactate may better reflect the dynamic equilibrium of lactate production-utilization since lactate utilization by human forearm has been shown to be appreciable (JORFELDT, 1970). JORFELDT (1970) showed that when [^{14}C]-lactate was infused into the brachial artery during light forearm exercise, from 30 to 50% of the lactate was immediately oxidized to $^{14}CO_2$ by the muscle. If this finding is applicable to our discussion, it is probable that venous blood sampling at the anticubital vein may reflect the lactate concentration subsequent to the utilization of arterial blood lactate by the forearm muscle. In the absence of arterial-venous blood lactate difference data and simultaneous AT determination data, the discussion provided above should be interpreted as being hypothetical.

REFERENCES

CARLSTEN, A., JAGENBURG, B., SVANBORG, A., and WERKO, L. (1961) Myocardial metabolism of glucose, lactic acid, amino acids and fatty acids in healthy human individuals at rest and at different work loads. *Scand. J. Clin. Lab. Invest.*, **13**: 418–428.

COSTILL, D. L., THOMASON, H., and ROBERTS, E. (1973) Fractional utilization of the aerobic capacity during distance running. *Med. Sci. Sports*, **5**: 248–252.

DAVIS, J. A., FRANK, M. H., WHIPP, B. J., and WASSERMAN, K. (1979) Anaerobic threshold alterations caused by endurance training in middle-aged men. *J. Appl. Physiol.*, **46**: 1039–1046.

DAVIS, J. A., VODAK, P., WILMORE, J. H., VODEK, J., and KURTZ, P. (1976) Anaerobic threshold and maximal aerobic power for three modes of exercise. *J. Appl. Physiol.*, **41**: 544–550.

DEPOCAS, F., MINARIE, Y., and CHATONNET, J. (1969) Rates of formation and oxidation of lactic acid in dogs at rest and during moderate exercise. *Can. J. Physiol. Pharmacol.*, **47**: 603–610.

FITTS, R. H. and HOLLOSZY, J. O. (1976) Lactate and contractile force in frog muscle during

development of fatigue and recovery. *Am. J. Physiol.*, **231**: 430–433.

FUCHS, F., REDDY, Y., and BRIGGS, F. M. (1970) The interaction of cations with the calcium binding site of troponin. *Biochim. Biophys. Acta*, **221**: 407–409.

GYDIKOV, A. and KOSAROV, D. (1974) Some features of different motor units in human biceps brachii. *Pflügers Arch.*, **347**: 75–88.

HARRIS, P., BATEMAN, M., and GLOSTER, J. (1962) The regional metabolism of lactate and pyruvate during exercise in patients with rheumatic heart disease. *Clin. Sci.*, **23**: 545–560.

ISSEKUTZ, B., BIRKHEAD, N. C., and ROHDAHL, K. (1962) Use of respiratory quotients in assessment of aerobic work capacity. *J. Appl. Physiol.*, **17**: 47–50.

JORFELDT, L. (1970) Metabolism of L(+)-lactate in human skeletal muscle during exercise. *Acta Physiol. Scand.* (Suppl. 338).

KADEFORS, R., KAISER, E., and PETERSEN, I. (1968) Dynamic spectrum analysis of myo-potentials with special reference to muscle fatigue. *Electromyogr. Clin. Neurophysiol.*, **8**: 39–74.

KARLSSON, J. (1979) Localized muscular fatigue: Role of muscle metabolism and substrate depletion. *Exercise Sport. Sci. Rev.*, **7**: 1–42.

KEUL, J., DOLL, E., and KEPPLER, D. (1967) The substrate supply of human skeletal muscle at rest, during and after work. *Experimentia*, **23**; 974–979.

KOMI, P. V. and TESCH, P. (1979) EMG frequency spectrum, muscle structure, and fatigue during dynamic contraction in man. *Eur. J. Appl. Physiol.*, **42**: 41–50.

KOMI, P. V. and VIITASALO, J.H.T. (1976) Signal characteristics of EMG at different levels of muscle tension. *Acta Physiol. Scand.*, **96**: 267–276.

KREBS, H. A., HEMS, R., WEIDEMAN, M. J., and SPEAKE, R. N. (1966) The fate of isotopic carbon in kidney cortex synthesizing glucose from lactate. *Biochem. J.*, **100**: 242–249.

LEVY, M. N. (1965) Lactate uptake by the intact kidney. *Ann. N. Y. Acad. Sci.*, **119**: 1029–1037.

LINDSTROM, L., KADEFORS, R., and PETERSEN, I. (1977) An electromyographic index for localized muscle fatigue. *J. Appl. Physiol.*, **43**: 750–754.

LINDSTROM, L., MAGNUSSON, R., and PETERSEN, I. (1970) Muscular fatigue and action potential conduction velocity changes studied with frequency analysis of EMG signals. *Electromyogr. Clin. Neurophysiol.*, **10**: 341–356.

MILNER-BROWN, H. S., STEIN, R. B., and YEMM, R. (1973a) The contractile properties of human motor units during voluntary isometric contractions. *J. Physiol (Lond.)*, **228**: 285–306.

MILNER-BROWN, H. S., STEIN, R. B., and YEMM, R. (1973b) The orderly recruitment of human motor units during voluntary isometric contraction. *J. Physiol. (Lond.)*, **230**: 359–370.

MORITANI, T. (1980) Anaerobic threshold determination by surface electromyography. Ph. D. Dissertation, University of South California, U.S.A.

MORTIMER, J. T., MAGNUSSON, R., and PETERSEN, I. (1970) Conduction velocity in ischemic muscle: Effect on EMG frequency spectrum. *Am. J. Physiol.*, **219**: 1324–1329.

NAKAMURA, Y. and SCHWARTZ, A. (1972) The influence of hydrogen ion concentration on calcium binding and release by skeletal muscle sarcoplasmic reticulum. *J. Gen. Physiol.*, **59**: 22–32.

OLSON, R. E. (1963) Excess lactate and anaerobiosis. *Ann. Intern. Med.*, **59**: 960–963.

PERSON, R. S. and KUNIDA, L. P. (1972) Discharge frequency and discharge pattern of human motor units during voluntary contraction of muscle. *Electroencephalogr. Clin. Neurophysiol.*, **32**: 471–483.

PORTZHEL, H., ZAORALEK, P., and GAUDIN, J. (1969) The activation by Ca^{++} of the ATPase of extracted muscle fibrils with variation of ionic strength, pH and concentration of MgATP. *Biochim. Biophys. Acta*, **189**: 440–448.

ROWELL, L. B., KRANING, K. K., EVANS, T. O., KENNEDY, J. W., BLACKMON, J. R., and KUSAMI, F. (1966) Splanchnic removal of lactate and pyruvate during prolonged exercise in man. *J. Appl. Physiol.*, **21**: 1773–1783.

SALTIN, B. (1977) The interplay between peripheral and central factors in the adaptive response to exercise and training. *Ann. N. Y. Acad. Sci.*, **301**: 224–231.

SALTIN, B. and KARLSSON, J. (1971) Muscle ATP, CP and lactate during exercise after physical conditioning. *In*: Muscle Metabolism during Exercise, ed. by PERNOW, B. and SALTIN, B. Plenum Co., New York, pp. 395–399.

STAINSBY, W. N. and WELCH, H. G. (1966) Lactate metabolism of contracting dog muscle *in situ*. *Am. J. Physiol.*, **211**: 177–183.

TANJI, J. and KATO, M. (1973a) Firing rate of individual motor units in voluntary contraction of adductor digiti minimi muscle in man. *Exp. Neurol.*, **40**: 771–783.

TANJI, J. and KATO, M. (1973b) Recruitment of motor units in voluntary contraction of a finger muscle in man. *Exp. Neurol.*, **40**: 759–770.

WASSERMAN, K., VAN KESSEL, A. L., and BURTON, G. G. (1967) Interaction of physiological mechanism during exercise. *J. Appl. Physiol.*, **22**: 71–85.

WASSERMAN, K. and WHIPP, B. J. (1975) Exercise physiology in health and disease. *Am. Rev. Respir. Dis.*, **112**: 219–249.

WASSERMAN, K., WHIPP, B. J., KOYAL, S. N., and BEAVER, M. L. (1973) Anaerobic threshold and respiratory gas exchange during exercise. *J. Appl. Physiol.*, **35**: 236–243.

YOSHIDA, T., NAGATA, A., and MURO, M. (1980) Evaluation of human performance by means of electromyogram and oxygen uptake. The Proceedings of the 5th National Seminar of Biomechanics, p. 45.

ZHUKOV, E. K. and ZAKHARYANTS, J. Z. (1960) Electrophysiological data concerning mechanisms of overcoming fatigue. *J. Physiol.* (*Lond.*), **46**: 819–827.